OAKS LANDSCAPE PRODUCTS

tech note

number L4

MAINTENANCE & REPAIR OF INTERLOCKING CONCRETE PAVEMENTS
(Last Updated October 2017)

Interlocking Concrete Pavements are recognized as having a long service life especially when compared to other more traditional pavement alternatives. However, it is important for owners to monitor the condition of their pavements and rectify any signs of distress in order to fully optimize the pavement's lifespan.

The following table summarizes our recommended regular and semiannual inspection programs, which are elaborated upon is Sections 1 and 2 respectively. Section 3 discusses the potential reasons behind more serious problems (i.e. where remedial maintenance is required), and how to evaluate the situation to determine the required remedial maintenance action(s).

Regular Inspection	**Action**
a) Inspect paver surface for dirt and debris.	Clean as required.
b) Inspect paver surface for stains.	Clean as required.
c) Check for damaged pavers.	Replace paver(s) as needed, especially if a trip hazard exists.
d) Inspect paver surface for weeds and moss.	Remove weeds or moss as required.
e) Evaluate condition of pavement markings.	Re-paint as required.
Semi Annual Inspection	**Action**
a) Check for lippage between adjacent pavers.	Re-set pavers if lippage > 6mm.
b) Verify depth of jointing material.	Replenish when >12mm from surface
c) Check for surface elevation changes (depressions/ruts/heaving)	Remediate when elevation change > 13mm as measured using a straight edge.
d) Check for surface movement (Shifting/creep)	Remediate when movement > 13mm or joint material loss evident

1) REGULAR INSPECTIONS

Regular inspections fundamentally involve a walk around the site – no tools are required. The objective is to assess the general appearance of the pavement.

a) DIRT AND DEBRIS

Pavement surfaces can regularly be exposed to trash, contaminated surface water run-on, wind-blown and tracked on dirt, and fallen leaves. Debris and sediment accumulates in low

laying areas, between the joints, or around the perimeter of the pavement. Regular cleaning will help the pavement keep its original appearance.

In the spring, the inspector should also look for accumulations of residual de-icing agents; some de-icing agents can chemically damage the pavers and should therefore be cleaned off as soon as possible.

For small areas, it is easiest to broom the area by hand. For larger areas, mechanical sweepers can be used. The use of rotating brooms is discouraged; they only push sediment around and do not get into the chamfered area of the pavers, so debris ends up accumulating in a larger area of the joints. Use a broom device with some level of suction such as a regenerative air or similar.

If the previous does not work, use a hose or pressure washer to loosen the dirt and push it off the pavement surface. Direct the water at an angle not greater than 30 degrees and across the diagonal, and use a wide nozzle spray; this will reduce the risk of dislodging joint sand. Please note that some pressure washers have enough power to expose aggregate on the surface of the pavers; test the nozzle style, distance from the surface and pressure on spare pavers (if available) prior to working on the main pavement area.

b) <u>STAINS</u>

Any pavement surface is subject to stains or marking, be it due to general trafficking or contamination from other sources. Ideally cleaning takes place as soon as the stain or marking appears, but this may not be realistic in commercial, industrial or municipal applications. Using a sealer will delay how long it takes for the stain to set, but if the deleterious material is not removed within a reasonable period of time the stain will eventually set into the concrete.

"*ICPI Tech Spec 5 - Cleaning, Sealing and Joint Sand Stabilization of Interlocking Concrete Pavement*" lists stain removal recommendations for several specific items like blood, food drippings, creosote, wood rot, and paint, amongst others. Below are recommended practice for some of the most common stains. The following are general rules of thumb when cleaning stains:

- Start removal of stains at the low end of the pavement and work up the slope in manageable sections. This way the surface remains dry ahead of the cleaner-soaked areas, allowing better visibility of the stains to be removed.
- Where the cleaning agent/stain remover may run onto vegetated areas, saturate the vegetation with water prior to cleaning; this will minimize the absorption of cleaner and reduce the risk of damage to the vegetation.
- When pavers have stains too difficult to remove, replace them with the same type of unit – refer to "*ICPI Tech Spec 6 - Reinstatement of Interlocking Concrete Pavements*". There may be a difference in colour from the surrounding pavers, even if the replacement paver(s) was taken from attic stock; this variation should eventually disappear. If the colour variation is unacceptable or attic stock is not available, then

consider adding an accent or border to the pavement area of a different colour – then use the pavers removed from the border/accent as replacement for the stained units.

Rust Stains: To remove a rust stain, the surface should be wetted and the affected area treated with an acid based concrete cleaner (no stronger than an equivalent 5% Hydrochloric acid solution or similar). Care must be taken as the acid in cleaners can adversely affect the concrete; it may leave a slightly roughened surface or leach out some of the pigment from the concrete. After application of the cleaner any residue should be washed off the surface of the concrete with copious quantities of water to avoid staining. Dispose of the run-off safely. All manufacturers' instructions must be strictly followed and after cleaning is completed, any chemical residue should be properly disposed of.

Oil Stains: Oil penetrates readily into concrete, but it should not stain if any spillage is removed promptly with an absorbent material (e.g. paper towels or cloth). Do not wipe as this will drive the oil into the concrete and spread the contamination over a larger area. If the stain persists, a cleaner suitable for the purpose should be used in accordance with the manufacturers' instructions. Alternatively the surface can be scrubbed with a strong detergent and the residue washed away with hot water. However, care must be taken as this method might also result in the leaching out of some pigment from the concrete product and discolouration due to surface abrasion.

Bitumen Stains: Bitumen does not penetrate concrete readily. The bitumen should be left until it has cooled. It can then be removed using a paint scraper or similar mechanical device. If it is particularly resistant, the use of ice to make the bitumen brittle may be required, prior to scraping it from the paving. Any residue should be removed with an abrasive powder, and finally the whole area rinsed with clean water. Certain proprietary cleaning agents are also available to remove bitumen, but these should first be tested on an inconspicuous area of the paving.

Chewing Gum: Chewing gum is one of the most difficult substances to remove from any surface. Newly discarded gum can be scraped off using a scraper. Hardened gum can be removed by chiselling it off the surface of the paving, using a hot water/steam cleaner, or by chemical means. There are contract cleaning companies who specialise in this type of cleaning, and it is recommended that they be contacted directly for further details.

Scuff marks from vehicle tires: These can normally be removed by steam cleaning or by scrubbing the area with hot water and a strong detergent.

c) DAMAGED PAVERS

Interlocking pavements are a flexible pavement system consisting of individual concrete paver units; occasional one or more of these individual units can be damaged during transportation and/or installation. Ideally any defective units will be identified and disposed of by the contractor, but sometimes the deficiency is not noticed until after the pavers are installed and the entire pavement is completed. Individual, or clusters of, pavers can also

become damaged after installation due to impacts (e.g. dropping heavy materials or stabilizer pads on the surface), heavier than intended traffic using the area, or chemical exposure. The intent of the regular inspection is to identify cracked, chipped, spalled or deteriorating pavers that are either aesthetically unpleasant or could present a trip hazard to pedestrians.

To remove a damaged paver(s), scrape out the jointing material around the first unit, then use a paver extractor (see adjacent) or pair of screwdrivers to pull the paver up. If this does not work, use a hammer and chisel to break up the first paver. Depending on the location of the paver, it may be easier to start at an outside edge and work your way towards the paver. Once you get the first one out, you can get under the other stones to pull them out, making the job much easier.

Prior to reinstating existing pavers, be sure to remove any accumulated sediment or stuck on polymeric sand from the sides and bottom of the stone, or else it will be very difficult to align them properly. Note that it is easier to remove most polymeric sand by wetting the material down; the additives are designed to soften up when they are wet, making removal easier.

To reinstate the paver(s), add and screed additional bedding material, install new pavers from attic stock, compact the pavers into the bedding layer, refill the joints and vibrate full. Additional details can be found in "*ICPI Tech Spec 6 – Reinstatement of Interlocking Concrete Pavements*".

Should paver damage re-occur or is excessive, refer to Section 3a which outlines in more detail how to determine the reason(s) for paver damage.

d) <u>WEEDS AND MOSS</u>

It is important to understand that weeds grow when soil accumulates in the joints, then seedlings fall on top of, and germinate into, this soil. The regular cleaning of dirt and debris outlined previously should prevent weeds and moss from occurring.

Similarly, moss, lichens and algae should not grow on concrete unless the area is heavily shaded, is under a tree or is not adequately drained. Ensuring proper drainage during the original installation will help avoid moss growth.

Should young weeds or moss begin to appear, remove them as soon as they are noticeable. Ideally this can be accomplished using a screwdriver or nail to dig down into the joint and remove the root system.

For established weeds, one may need to use an organic solution to destroy the plant. Vinegar mixed with dish detergent, or boiling water, are two environmentally friendly alternatives; by pouring these over the infected areas, one can kill already existing organics and prevent new ones from sprouting. Use of more aggressive weed killers is at the discretion of the owner.

For established moss, lichens and algea, treat the area with a solution of 20% dish soap and 80% water. If this does not work, use a proprietary cleaner suitable for the purpose.

e) PAVEMENT MARKING

There are two ways of stripe marking an interlocking concrete pavement – using different coloured pavers to create the markings (see adjacent), or painting the markings onto the pavement surface.

In the case of the initial, ensure that there is enough contrast between the main field and line pavers that some fading can be accommodated.

In the case of the latter, re-painting will occasionally need to be done. Use standard line paint used for concrete surfaces.

2) SEMIANNUAL INSPECTION

Semi-annual inspections involve taking measurements to verify any deficiencies in the pavement are within acceptable tolerances. A measuring tape, straight edge, 12mm diameter rod, and scraper is needed.

a) LIPPAGE

Because of the way pavers are manufactured, there can be slight height variations amongst units; CSA A231 *Precast Concrete Paving Slabs/Precast Concrete Pavers* allows for the measured height of samples to differ by up to +/- 3.0mm from the specified dimension. However, lippage should not be visible on the final pavement surface if the bedding layer is properly screeded (see adjacent) and remains

uncompacted until final bedding of the pavers. The recommended method of installation is to layout the pavers on top of the uncompacted bedding layer, then use a vibratory plate compactor to seat them into the bedding layer; this way, height variances between adjacent pavers is adjusted for within the bedding layer and the final pavement surface ends up being level. When a contractors levels out and compacts a thin layer of screedings over the granular base (to level it out) in lieu of the bedding layer, or pre compacts the bedding layer, the bedding layer cannot compensate for any height variances in the pavers so lippage becomes evident on the pavement surface.

During the regular inspection, make sure any lippage does not pose a potential trip hazards for pedestrians. Use a measuring tape to measure any height difference, and if greater than 6mm re-set the pavers. Lippage can also pose a snag issue for snow plows, and can causing damage to both the pavers and snow plow equipment. If lippage problems persist, this may be evidence of a more serious settlement/frost heave problem; refer to Section 2c for more details.

b) <u>JOINT MATERIAL</u>

A chamfer is a 45 degree beveled edge around the top of a paver unit that helps prevent edge chipping and delineates the individual paving units. When first installed, jointing sand should fill the entire joint to the bottom of the chamfer. However, as the pavement is trafficked, the jointing sand can continue to consolidate within the joint. Jointing sand loss can also occur from a number of factors including: heavy rain, sweeping, pressure washing, pumping under traffic loading, etc.

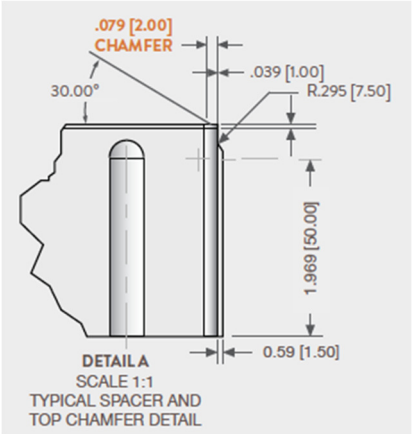

On a semi-annual basis, and after severe storm events (especially when flooding occurred), use a putty knife to check the depth of the jointing sand – it should never be lower than 12mm below the top surface of the paver.

If required, spread new joint material over the pavement area, clean off excess material that does not flow down into the joints, then run over the surface with a small vibrating compactor to help consolidate the material within the joints. Repeat until the joints are full to the bottom of the chamfer.

In areas subject to aggressive regular cleaning (amusement parks, restaurant patios), to concentrated water flows (at roof drain outlets), on steep slopes (over 7%) or where there are wide paver joints (excluding permeable pavers), consider using a stabilized jointing sand. Joint sand stabilizers are liquid or dry additives mixed with the joint sand to help secure it in place – some brands come with the stabilizing agent pre-mixed in the sand, while others need to be mixed with or applied to the sand onsite.

c) ELEVATION CHANGES (DEPRESSIONS/RUTS/HEAVING)

A depression is when one or more pavers have sunk and are lower than the surrounding pavers or road features (adjacent photo). Rutting is a surface depression that occurs specifically in wheel tracks (middle photo). Heaving is when one or more pavers are have raised and are higher than the surrounding pavers or road surface (lower photo).

Depressions or ruts are initially identified by surface water ponding, while heaving is identified by openings in the joints. Do not assume shadows and colour changes are evidence of elevations changes, as they can actually give the impression of movement where none exists. It is always best to lay a 3 m long straight edge on the surface and measure any height variances along the length (middle photo) – elevation changes should not exceed 13mm. Rather than try to use a ruler to measure the variance, find a 12mm diameter rod (dowels are available at most hardware stores) and try to slide it under the straightedge when it is laying flat.

When an elevation change is identified, it is important to determine the reason for the problem prior to initiating remedial action. Additional details are available in Sections 3b through 3d below.

d) SURFACE MOVEMENT (SHIFTING/CREEP)

Perimeter creep exists when the pavers start to shift at or near the outside perimeter of the installation. Joint start to grow and the bond lines no longer line up. Vehicle traffic turning, stopping or starting in the area exasperate the problem once it begins. Additional details on evaluating the reason(s) for and remediating creep is available in Section 3e below.

Paver shifting is similar to the previous, but within the pavement field (i.e. not close to the outside perimeter of the pavement). As mentioned previously, these are a flexible pavement system, so some degree of shifting can occur without affecting the pavement performance. However, when movement similar to what is shown in the adjacent is observed, wherein joint material is being lost in areas, remedial action will be required. Additional details on evaluating the reason(s) for and remediating shifting is available in Section 3f below.

3) EVALUATION OF PROBLEMS AND REMEDIAL REQUIREMENTS

a) DAMAGED PAVERS

As mentioned previously, damage to pavers can include cracking, chipping, spalling or general deterioration. The following subsections discuss the most common causes for each of these problems.

Hairline Cracks: Randomly oriented hairline cracks (little to no opening) on the paver surface are typically related to production issues; these pavers should never have made it through production quality assurance or have been installed by the contractor. These pavers are aesthetically unpleasant and will be more susceptible to freeze thaw damage due to the poor general quality; therefore, they should be replaced.

Visible Cracks: Visible cracks that extend across the entire unit are evidence of damage due to product overloading or poor installation practices. For example, the pavers in the adjacent photo were initially selected based on their suitable for a pedestrian walkway; unfortunately the designer neglected to consider the fact that maintenance vehicles would drive over the pavers, and the pavers cracked under load.

When product overloading occurs, the owner should evaluate whether (A) the existing pavers should be replaced with a different product that is suitable for the expected traffic loading, (B) consider an alternate design approach (bituminous set as an example) that would provide greater flexural support to the existing pavers, or (C) install measures to prevent vehicles from accessing the area (e.g. bollards).

The most common "problematic" installation practice is using the wrong compaction equipment during installation – for example, only roller compactors should be used with larger pavers and slabs; plate tampers can crack the units. Although this type of cracking dose not adversely impact the structural integrity of the pavement, it may not meet the aesthetic expectations of the owner and the broken units will need to be replaced.

Edge Chipping: For pavers with nominal to no chamfers (see adjacent), chipping along the outside edge of the pavers can occur (especially when installed tightly together). As traffic drives over the pavement, the pavement flexes and the outside edges of the pavers can come into contact with one another; the resulting pressure between units can pop edges off one or both of the paver faces. If the problem is wide spread or persists, the owner can consider having the product re-laid with increased joint spacing.

For larger chamfered product, chipping typically only occurs when two cut pavers are butted tightly up to one another, or a cut paver butts up against a solid object (curb or building). This problem can be avoided by always having a cut edge butt up against an uncut paver; that way there is a chamfered edge next to the cut. If the problem is wide spread or persists this can be an initial indication of pavement movement (see Sections 3b to 3d for more details).

Surface Spalling: Spalling of the paver surface (adjacent) occurs when something like a snow plow strikes an exposed outside edge of the unit and shears off a section of the face. This only occurs when the paver(s) is elevated above the adjacent surface, which can be a result of poor installation or settlement/frost heave. In the case of poor installation, the pavers would need to be lifted and relayed. To assess settlement or frost heave, refer to Sections 3b to 3d for more details.

Deterioration: Deterioration of the paver (adjacent) is indicative of chemical damage from de-icing chemicals; magnesium based de-icers in particular are problematic in that the magnesium chemically degrades the cement paste. The owner should discontinue the use of these deicing chemicals, or at minimum switch to a sodium chloride deicing agent which is not as harmful to the product.

Deterioration of pavers adjacent to road features such as concrete edge restraints (see adjacent), catch basins or manholes is due to settlement of the underlying base and subbase materials. Proper compaction in these areas during installation requires extra effort to achieve, and therefore may not have been accomplished. As the material and pavers settle, the pavers separate and the joint material gets washed out. Once this occurs, vehicles trafficking the area will cause the pavers to knock together breaking them apart. The pavers would need to be lifted, the base and subbase properly compacted, then the pavers reinstated.

b) <u>DIFFERENTIAL SETTLEMENT (DEPRESSIONS)</u>

A depression exists when one or more pavers are lower than the surrounding pavers or road features. Depressions are most commonly caused by bedding sand migration, or settlement of the underlying subgrade/ granular base. Bedding sand migration can occur next to a cracked curb or rigid base through which bedding sand can migrate. Subgrade or granular base settlement can occur over poorly installed utility cuts or adjacent to road features where proper compaction may not have been performed during original construction.

Where bedding sand migration is the issue, repair the crack in the curb or rigid base and place a 300 mm wide length of geotextile fabric over the repaired area to prevent any future bedding sand migration; with a curb, lay the geotextile partly under the pavers/bedding sand, then up the vertical face of the curb.

For minor subgrade or base settlement, it may be sufficient to lift the existing pavers, level the base and compact, then reinstate the pavers. For severe settlement, total reconstruction of the entire pavement system, including compaction/stabilization of the subgrade, may be needed. Consult with the original designer, or other appropriate professional, to assess the situation before proceeding.

c) RUTTING IN PAVEMENT SURFACE

Rutting is a surface depression that occurs specifically in wheel tracks, and can be attributed to three possible actions: saturation of the bedding sand; degradation of the bedding sand; and/or, failure of the underlying subgrade.

Saturation of the bedding sand occurs when the fines content of the material is too high causing water that seeps down through the joints to get trapped (i.e. the bedding sand is not free draining); this is often the case when screenings are used for bedding sand. If the bedding sand remaining saturated for extended periods of time, the smaller particles can become suspended and migrate with the water as it displaces when vehicles drive over the surface. The end result is settlement in the vehicle tracks.

Degradation of the bedding sand occurs when the aggregate particles are not durable enough to withstand the abrasive conditions exerted through the pavers by passing vehicles, and the bedding materials break down. The problem is further exasperated when the resulting fines start to trap water (see previous paragraph).

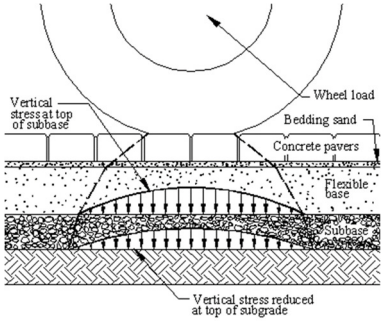

Failure of the subgrade occurs when the depth of the aggregate base is insufficient for the given traffic conditions (the deeper the aggregate base, the higher the stress reduction on the subgrade – see adjacent), and the subgrade starts to break down and/or consolidate.

When pavers are installed over a supporting impervious (concrete or asphalt) base that is not properly drained, over saturation of the bedding sand can occur to the point where water will pump out from between the pavers as vehicles drive over the surface removing both the bedding and jointing material (see adjacent).

Evaluation and repair requires the removal of the pavers and bedding sand in the subsided area. Observe the condition of the bedding material during removal. A total lack of larger particles would be evidence of sand degradation - refer to "*ICPI Tech Spec 17 – Bedding Sand Selection for Interlocking Concrete Pavements in Vehicular Applications*" for details on conducting Micro Deval degradation testing on the replacement bedding material with

the maximum degradation losses, when measured in accordance with CSA A23.2-23A, being 8%. Small particles suspended in a slurry, would be evidence of a high fines content – source a replacement bedding sand with a gradation as shown in Table 1 of Tech Spec 17.

If lack of drainage through the supporting base is the problem, then a more comprehensive review of the design details is required. Check that surface drains are located at all low spots, and that the drains are complete with slots or holes on the sides to allow water in the bedding sand to escape. Please note that in order to properly drain the bedding material, a drainage point is recommended for every 40 square meter (400 square foot) of pavement surface and at 7 metre (20 foot) spacing along the low side perimeter curb; drainage points can include surface drains, vertical weep holes, and horizontal weep holes. Vertical weep holes are 50mm (2") diameter holes cast or cored through the concrete then filled with washed peas gravel and covered with geotextile. Horizontal weep holes are 25mm (1") diameter holes drilled through the curb (daylights on the outside face of the curb); a geotextile is placed against the inside of the curb to prevent bedding sand loss.

d) FROST HEAVE

Frost heave is the upwards swelling of soil during freezing conditions caused by an increased presence of ice lenses displacing the soil particles. For frost action to occur three basic conditions must be satisfied: the soil must be frost-susceptible; water must be available in sufficient quantities; and cooling conditions must cause soil and water to freeze. If one of these conditions can be eliminated, frost heaving will not occur.

Frost-susceptibility is related to size distribution of soil particles. In general, coarse-grained soils such as sands and gravels do not heave, whereas clays, silts and very fine sands will support the growth of ice lenses.

Being a flexible pavement system, interlocking concrete pavements can endure a certain amount of frost action without sustaining irreversible damage. However, when the effects of frost heave are permanent, total reconstruction of the entire pavement system, including deepening the road profile to a greater percentage of the frost depth, may be needed. Other improvements could include the addition of subgrade drainage piping, improved surface drainage, and the use of stabilized jointing material to minimize surface water infiltration.

e) PERIMETER CREEP

When initially installed, paver joints (spacing between the pavers below the chamfer) should be between 1.5 mm (1/16") and 3 mm (1/8") wide, and the joint (bond) lines should be within +/- 12.5 mm (1/2") over a 15m (50') string line.

Perimeter creep exists when the pavers start to shift at or near the outside perimeter of the installation, and the joints sizes change plus the bond lines no longer line up. Vehicle traffic turning, stopping or starting in the area exasperate the problem.

Perimeter creep occurs due to either a lack of proper edging, or insufficient support of the edging.

Plastic or aluminum edging should only be used in pedestrian or residential driveway applications; commercial vehicular applications require a cast in place concrete curb. Make sure there are enough spikes installed to hold the edging in place; refer to the manufacturer's instructions for specifics. Also check the extent of the base; it should extend at least 150mm (6") beyond the spikes as this is what the spikes lock into to prevent movement. Spikes should not be driven down into topsoil or loose fill as these provide no lateral support.

Remediation involves lifting the pavers that have moved, extending the base (if required), installing the edge restraint directly on the base, and securing the edge restraint using the number, spacing and size of spikes recommended by the manufacturer.

f) PAVER SHIFTING

Paver shifting is similar to the previous, but within the pavement field (i.e. not close to the outside perimeter of the pavement). As mentioned previously, interlocking concrete pavements are a flexible pavement system, so some degree of shifting can occur without affecting the pavement performance. However, when movement similar to what is shown adjacent is observed, particularly in areas subject to a lot of traffic starting, stopping and turning such as cross walks, remedial action may be required.

Although bedding sand disintegration, subgrade settlement, amongst other methods of distress, can all be occurring the bottom line is the traffic impacts are likely exceeding the design capacity of the pavement structure. In high traffic areas, we recommend that a bituminous set paver system over a concrete base be used. Studies at the Centre for Pavement and Transportation Technology at the University of Waterloo determined that a properly constructed bituminous set paver system over a concrete base has a lifetime load

limit of 7.5 million lifetime ESALS (amount of traffic expected on an arterial or major streets) so can handle these severe traffic conditions.

FINAL NOTE

As a final note, this document was prepared as a reference guide to identify, evaluate and rectify various possible pavement distress. Although a lot of content was provided, this is in no way a comprehensive summary – more than one distress may be present, or there could be more than one reason for the given distress. Additional information is available in the "*ICPI Distress Manual*" and "*ASTM E2840 – Standard Practice for Pavement Condition Index Surveys for Interlocking Concrete Roads and Parking Lots*". If questions arise, please do not hesitate to contact Oaks for assistance.